# Stability, Nonlinear Oscillations and Bifurcation in a Delay-Induced Predator-Prey System with Harvesting

Debaldev Jana, Swapan Chakraborty and Nandadulal Bairagi

***Abstract*—A harvested predator-prey system that incorporates feedback delay in prey growth rate is studied. Considering delay as a parameter, we investigate the effect of delay on the stability of the coexisting equilibrium. It is observed that there exists a critical length of the delay parameter below which the coexistence equilibrium is stable and above which it is unstable. A Hopf bifurcation exists when delay crosses the critical value. By applying the normal form theory and the center manifold theorem, we determine the explicit formulae that demonstrate the stability and direction of the bifurcating periodic solutions. Computer simulations have been carried out to illustrate different analytical findings. Our simulation results indicate that the Hopf bifurcation is supercritical and the bifurcating periodic solutions are unstable for the considered parameter values. The system, however, can be stabilized from its unstable oscillatory state only by lowering the intrinsic growth rate of prey population.**

***Index Terms*—predator-prey model, harvesting, delay, stability, oscillations, direction of Hopf bifurcation.**

## I. Introduction

THE most studied topics in theoretical ecology is the predator-prey interaction and its possible outcomes. This is because of its all over existence in the natural world. Various mathematical models have been proposed from different biological point of views to study the interaction between prey and predator [1]–[3]. Harvesting is an old technique used for biological resource exploitation. However, overexploitation is the most responsible factor to the persistence of harvested stocks and causes not only economic loss but also changes the ecosystem structure and functioning [4]–[9]. Recently, Bairagi et al. [10] considered the following predator-prey model with harvesting:

$$\begin{aligned} \frac{dx}{dt} &= rx(1-\frac{x}{k}) - \frac{\alpha xy}{ay+x}, \\ \frac{dy}{dt} &= \frac{\alpha b_0 xy}{ay+x} - d_0 y - \frac{qEy}{bE+ly}, \end{aligned} \tag{1}$$

where $x(t)$ and $y(t)$ be, respectively, the prey and predator densities at time $t$. It is assumed that the prey population grows logistically to its carrying capacity $k$ with intrinsic growth rate $r$. $b_0$ and $d_0$ be, respectively, the conversion efficiency and natural death rate of predator. Functional response of predator is assumed to follow ratio-dependent Type II form with maximum prey consumption rate $\alpha$ and half-saturation constant $a$. Predator is harvested following the Michaelis-Menten type catch rate with catchability coefficient $q$ and harvesting effort $E$. All parameters including $b$ and $l$ are assumed to be positive. Using Melnikov's method, they observed that the system (1) exhibits heteroclinic bifurcations. They also showed that the system may exhibit monostability, bistability and tristability depending on the initial values of the system populations and the harvesting effort.

Delay is frequently used in a predator-prey model to represent the biological process more accurately. Predator-prey models with discrete delay exhibit different interesting dynamics, such as the existence of Hopf bifurcation, and Bogdanov-Takens bifurcation [11], [12]. An excellent review work of predator-prey models with single discrete delay can be seen in [13]. Simultaneous effects of harvesting and delay on predator-prey system were studied by several researchers [14]–[18]. The general observation is that the time delay makes a stable equilibrium unstable and harvesting, on the other hand, helps to regain the stability. In this study, we consider a discrete delay in the specific growth rate of prey to incorporate the effect of density dependence feedback mechanism which takes $\tau$ units of time to respond to changes in the prey population [19]. Thus the model system (1) reduces to the following delay-induced predator-prey model with harvesting:

$$\begin{aligned} \frac{dx}{dt} &= rx(1-\frac{x(t-\tau)}{k}) - \frac{\alpha xy}{ay+x}, \\ \frac{dy}{dt} &= y[\frac{\alpha b_0 x}{ay+x} - d_0 - \frac{qE}{bE+ly}]. \end{aligned} \tag{2}$$

The initial condition is

$$x(\phi) = \psi_1(\phi) \geq 0,\ y(\phi) = \psi_2(\phi) \geq 0,\ \phi \in (-\tau, 0].$$

Delay in the system (2) is based on the assumption that in the absence of predators the prey satisfies the delayed logistic equation [20]. The objective is to study the dynamic behavior of the system (2) and determine the direction and stability of the bifurcating periodic solutions, if any.

The organization of the paper is as follows: In Section II, we perform the local stability of the model system. Section III deals with the direction and stability of bifurcating periodic solutions. Rigorous numerical simulations of the model system are performed in the Section IV. Finally, a brief discussion is presented in the Section 4.

## II. Local Stability

Coexistence of species are given utmost importance in a predator-prey interaction and we are, therefore, only interested in the coexistence equilibrium of the system (2). The coexistence equilibrium point of the above system is given by $E^*(x^*, y^*)$, where the equilibrium prey density $x^*$ is given

Manuscript received August 21, 2012. This work was supported by DRS Programme (UGC No. F510/2/DRS/2012 (SAP-1)).

D. Jana and N. Bairagi are with the Centre for Mathematical Biology and Ecology, Department of Mathematics, Jadavpur University, Kolkata-700032, INDIA, e-mail: nbairagi@math.jdvu.ac.in

S. Chakraborty is with Baruipara High School, Halisahar, 24 Parganas (N), West Bengal, India.

(Revised online publication: 30 August 2012)

TABLE I
PARAMETER VALUES USED IN THE MODEL SIMULATION

| Parameter | Default value |
|---|---|
| $r$ | 1 |
| $k$ | 100 |
| $\alpha$ | 0.7 |
| $a$ | 10 |
| $b_0$ | 0.45 |
| $d_0$ | 0.04 |
| $q$ | 1 |
| $b$ | 0.1 |
| $E$ | 0.01 |
| $l$ | 0.04 |

by the positive root of the cubic equation

$$p_1x^3 + p_2x^2 + p_3x + p_4 = 0$$

with

$$\begin{aligned}
p_1 &= \tfrac{ab_0lr^2}{k^2},\\
p_2 &= \tfrac{r}{k}\left[(\alpha b_0 - d_0)l - ab_0r\left(2l + \tfrac{abE}{k}\right)\right],\\
p_3 &= r\Bigg[\tfrac{2abb_0E}{k}(ar-\alpha) + \tfrac{abd_0Er}{k} + b_0l(ar-\alpha)\\
&\qquad + d_0l + \tfrac{aqE}{k}\Bigg] \text{ and}\\
p_4 &= E\Bigg[-abb_0r(ar-2\alpha) - q(ar-\alpha)\\
&\qquad - bd_0(ar-\alpha) - \alpha^2bb_0\Bigg].
\end{aligned}$$

Observe that $p_1$ is always positive and $p_4$ is negative if $ar > 2\alpha$. Thus, the above cubic equation has at least one positive root when $ar > 2\alpha$. The equilibrium predator density is given by

$$y^* = \frac{rx^*\left(1 - \frac{x^*}{k}\right)}{\alpha - ar\left(1 - \frac{x^*}{k}\right)}.$$

Note that $y^*$ will be feasible if $\frac{k}{ar}(ar-\alpha) < x^* < k$. To observe the number of feasible coexistence equilibrium points, we plot the prey and predator isoclines of the system $(1)$ in the Fig. 1. This figure confirms that there exists two positive equilibrium points $E^*(93.9826, 57.5527)$ and $E_1(99.3691, 0.9843)$ for the parameter set given in the Table 1. Eigenvalues evaluated at these equilibrium points show that the equilibrium point $E^*$ has two negative eigenvalues and thus stable. The eigenvalues corresponding to the equilibrium point $E_1$ are of opposite signs and therefore unstable. The rest of the paper deals with the stable equilibrium point $E^*(x^*, y^*)$.

Let $X(t) = x(t) - x^*$ and $Y(t) = y(t) - y^*$ are the perturbed variables. Linearizing the system $(2)$ at $E^*(x^*, y^*)$, we get the linear system as follows:

$$\begin{aligned}
\frac{dX}{dt} &= \frac{\alpha x^*y^*X}{(ay^*+x^*)^2} - \frac{\alpha {x^*}^2Y}{(ay^*+x^*)^2} - \frac{rx^*X(t-\tau)}{k},\\
\frac{dY}{dt} &= \frac{\alpha ab_0{y^*}^2X}{(ay^*+x^*)^2} + \left[\frac{qEly^*}{(bE+ly^*)^2} - \frac{\alpha ab_0x^*y^*}{(ay^*+x^*)^2}\right]Y.
\end{aligned} \tag{3}$$

The characteristic equation of the corresponding variational matrix is given by

$$\lambda^2 + A\lambda + B + (C\lambda + D)e^{-\lambda\tau} = 0, \tag{4}$$

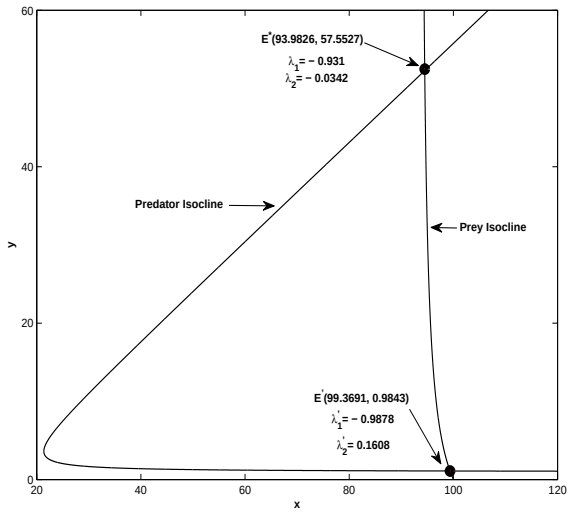


Fig. 1. The prey and predator isoclines of the model system $(1)$. There exists two equilibrium points (shown by bullets), where prey and predator isoclines intersect. Equilibrium values and the corresponding eigenvalues are also mentioned. Parameters are as in the TABLE 1.

where

$$\begin{aligned}
A &= -\left[\frac{\alpha(1-ab_0)x^*y^*}{(ay^*+x^*)^2} + \frac{qEly^*}{(bE+ly^*)^2}\right],\\
B &= \frac{\alpha x^*y^*}{(ay^*+x^*)^2}\left[\frac{qEly^*}{(bE+ly^*)^2} - \frac{\alpha ab_0x^*y^*}{(ay^*+x^*)^2}\right] + \frac{\alpha^2ab_0{x^*}^2{y^*}^2}{(ay^*+x^*)^4},\\
C &= \frac{rx^*}{k} \quad \text{and}\\
D &= -\frac{rx^*}{k}\left[\frac{qEly^*}{(bE+ly^*)^2} - \frac{\alpha ab_0x^*y^*}{(ay^*+x^*)^2}\right].
\end{aligned}$$

We now discuss two following cases.

**Case 1: Instantaneous feedback mechanism ($\tau = 0$)**

In the case of instantaneous feedback response of prey population, the value of $\tau$ becomes zero. In this case, the equation $(4)$ becomes

$$\lambda^2 + (A + C)\lambda + (B + D) = 0. \tag{5}$$

All roots of the equation $(5)$ have negative real parts if and only if

$$(H_1) \quad A + C > 0 \text{ and } B + D > 0.$$

Therefore, the equilibrium point $E^*(x^*, y^*)$ is locally asymptotically stable when $(H_1)$ holds. Then the following theorem is true.

**Theorem** 1. The coexistence equilibrium $E^*(x^*, y^*)$ of the system $(1)$ is locally asymptotically stable in absence of delay if $H_1$ holds.

**Case 2: Delayed feedback mechanism ($\tau \neq 0$)**

We first reproduce some definitions given by [21], [22].

**Definition 1.** The equilibrium $E^*$ is called asymptotically stable if there exists a $\delta > 0$ such that

$$\sup_{-\tau\le\theta\le 0}\left[\,|\psi_1(\theta) - x^*|,\ |\psi_2(\theta) - y^*|\,\right] < \delta$$

implies that

$$lim_{t\to\infty}(x(t), y(t)) = (x^*, y^*),$$

where (x(t), y(t)) is the solution of the system (2) which satisfies the prescribed initial condition.

**Definition 2.** The equilibrium $E^*$ is called absolutely stable if it is asymptotically stable for all delays $\tau \geq 0$ and conditionally stable if it is stable for $\tau$ in some finite interval.

For the delay-induced system $(2)$, the interior equilibrium $E^*(x^*, y^*)$ will be asymptotically stable if all the roots of the corresponding characteristic equation (4) have negative real parts. But, the classical Routh-Hurwitz criterion cannot be used to discuss stability of the system since equation (4) is a transcendental equation and has infinitely many eigenvalues. To determine the nature of the stability, we require the sign of the real parts of the roots of the equation (4). We start with the assumption that $E^*(x^*, y^*)$ is asymptotically stable in the case of non-delayed system (Case 1) and then we find conditions for which $E^*(x^*, y^*)$ is still stable in presence of delay [23]. By Rouche's Theorem [24] and the continuity in $\tau$, the transcendental equation (4) has roots with positive real parts if and only if it has purely imaginary roots. From this, we shall be able to find conditions for all eigenvalues to have negative real parts.

Let

$$\lambda(\tau) = \xi(\tau) + i\omega(\tau),$$

where $\xi$ and $\omega$ are real. As the interior equilibrium $E^*(x^*, y^*)$ of the non-delayed system is stable, we have $\xi(0) < 0$. By continuity, if $\tau$ $(> 0)$ is sufficiently small, we still have $\xi(\tau) < 0$ and $E^*(x^*, y^*)$ is still stable. The change of stability will occur at some values of $\tau$ for which $\xi(\tau) = 0$, $\omega(\tau) \neq 0$, i.e., $\lambda$ will be purely imaginary. Let $\tau_0$ be such that $\xi(\tau_0) = 0$ and $\omega(\tau_0) = \omega_0 \neq 0$, so that $\lambda = i\omega(\tau_0) = i\omega_0$. In this case, the steady state loses stability and eventually becomes unstable when $\xi(\tau)$ becomes positive. Now $i\omega_0$ is a root of (4) if and only if

$$-{\omega_0}^2 + iA\omega_0 + B + (iC\omega_0 + D)e^{-\omega_0\tau_0} = 0.$$

Equating the real and imaginary parts of both sides, we get

$$\begin{aligned} &D\cos\omega_0\tau_0 + C\omega_0\sin\omega_0\tau_0 = {\omega_0}^2 - B, \\ &C\omega_0\cos\omega_0\tau_0 - D\sin\omega_0\tau_0 = -A\omega_0. \end{aligned} \tag{6}$$

This leads to

$${\omega_0}^4 - [C^2 - A^2 + 2B]{\omega_0}^2 + B^2 - D^2 = 0. \tag{7}$$

This equation has no positive roots if the following conditions are satisfied:

$$(H_2) \quad A^2 - C^2 - 2B > 0 \text{ and } B^2 - D^2 > 0.$$

Hence, all roots of the equation $(7)$ will have negative real parts when $\tau \in [0, \infty)$ if conditions of the Theorem 1 and $(H_2)$ are satisfied.

Let

$$(H_3) \quad B^2 - D^2 < 0.$$

If Theorem 1 and $(H_3)$ hold then the equation $(7)$ has a unique positive root $\omega_0^2$. Substituting $\omega_0^2$ into $(6)$, we have

$$\tau_n = \frac{1}{\omega_0}\cos^{-1}\left[\frac{(D - AC)\omega_0^2 - BD}{D^2 + C^2\omega_0^2}\right] + \frac{2n\pi}{\omega_0}, \ \ n = 0, 1, 2, ..$$

Let,

$$(H_4) \quad \begin{aligned} &C^2 - A^2 + 2B > 0, \\ &B^2 - D^2 > 0 \text{ and} \\ &(C^2 - A^2 + 2B)^2 > 4(B^2 - D^2). \end{aligned}$$

If Theorem 1 and $(H_4)$ hold then $(7)$ has two positive roots $\omega_+^2$ and $\omega_-^2$. Substituting $\omega_\pm$ into $(7)$, we get

$$\tau_{2_k}^{\pm} = \frac{1}{\omega_\pm}\cos^{-1}\left[\frac{(D - AC)\omega_\pm^2 - BD}{D^2 + C^2\omega_\pm^2}\right] + \frac{2k\pi}{\omega_\pm}, \quad k = 0, 1, 2, ..$$

If $\lambda(\tau)$ be the root of $(4)$ satisfying $Re\lambda(\tau_n) = 0$ (respectively, $Re\lambda(\tau_k^{\pm}) = 0$) and $Im\lambda(\tau_n) = \omega_0$ (respectively, $Im\lambda(\tau_k^{\pm}) = \omega_\pm$), we get

$$\left[\tfrac{d}{d\tau}Re(\lambda)\right]_{\tau=\tau_0,\omega=\omega_0} = \tfrac{(A^2 - C^2 - 2B){\omega_0}^2 + 2\omega^4}{C^2{\omega_0}^2 + D^2} > 0. \ \ (by \ \ (H_2))$$

Similarly, we can show that

$$\begin{aligned} &\left[\tfrac{d}{d\tau}Re(\lambda)\right]_{\tau=\tau_k^+,\omega=\omega_+} > 0 \text{ and} \\ &\left[\tfrac{d}{d\tau}Re(\lambda)\right]_{\tau=\tau_k^-,\omega=\omega_-} < 0. \end{aligned}$$

From Corollary (2.4) in Ruan and Wei [25], we have the following conclusions.

**Theorem** 2**.** Assume $\tau \neq 0$ and conditions of the Theorem 1 are satisfied. Then the following conclusions hold:

(i) If $H_2$ hold then the equilibrium $E^*(x^*, y^*)$ is asymptotically stable for all $\tau \geq 0$.

(ii) If $H_3$ hold then the equilibrium $E^*(x^*, y^*)$ is conditionally stable. It is locally asymptotically stable for $\tau < \tau_0$ and unstable for $\tau > \tau_0$. Furthermore, the system $(1)$ undergoes a Hopf bifurcation at $E^*(x^*, y^*)$ when $\tau = \tau_0$, where

$$\tau_0 = \frac{1}{\omega_0}\cos^{-1}\left[\frac{(D - AC)\omega_0^2 - BD}{D^2 + C^2\omega_0^2}\right].$$

(iii) If $H_4$ holds then there is a positive integer $m$ such that the equilibrium is stable when $\tau \in [0, \tau_0^+) \cup (\tau_0^-, \tau_1^+) \cup ..... \cup (\tau_{m-1}^-, \tau_m^+)$, and unstable when $\tau \in [\tau_0^+, \tau_0^-) \cup (\tau_1^+, \tau_1^-) \cup ..... \cup (\tau_{m-1}^+, \tau_{m-1}^-) \cup (\tau_m^+, \infty)$. Further more, the system undergoes a Hopf bifurcation at $E^*(x^*, y^*)$ when $\tau = \tau_k^+$, $k = 0, 1, 2, ....$

## III. Direction and stability of Hopf bifurcation

In the previous section, we obtain the conditions under which a family of periodic solutions bifurcate from the coexistence equilibrium $E^*(x^*, y^*)$ at the critical value $\tau = \tau_0$. As pointed out in Hassard et al. [26], it is interested to determine the direction, stability and period of the periodic solutions bifurcating from the positive equilibrium. Following the ideas of Hassard et al., we derive the explicit formulae for determining the properties of the Hopf bifurcation at the critical value $\tau_0$ by using the normal form and the center manifold theory. Throughout this section, we always assume that the system $(2)$ undergoes a Hopf bifurcation at the positive equilibrium $E^*(x^*, y^*)$ for $\tau = \tau_0$ and then $\pm i\omega_0$ is the corresponding purely imaginary roots of the characteristic equation at the positive equilibrium $E^*(x^*, y^*)$.

Let $x_1 = x - x^*$, $x_2 = y - y^*$, $\bar{x}_i = x_i(\tau t)$, $\tau = \tau_0 + \mu$. Dropping the bars for simplification of notations, system $(2)$

is transformed into an functional differential equation (FDE) in $C = C([-1,0],\ R^2)$ as

$$\dot{x}(t) = L_\mu(x_t) + f(\mu, x_t), \tag{8}$$

where $x(t) = (x_1, x_2)^T \in R^2$ and $L_\mu : C \to R,\ f : R \times C \to R$ are given by

$$\begin{aligned} L_\mu(\phi) = (\tau_0+\mu)\begin{pmatrix} a_{11} & a_{12} \\ a_{21} & a_{22} \end{pmatrix}\begin{pmatrix} \phi_1(0) \\ \phi_2(0) \end{pmatrix} \\ + (\tau_0+\mu)\begin{pmatrix} b_{11} & 0 \\ 0 & 0 \end{pmatrix}\begin{pmatrix} \phi_1(-1) \\ \phi_2(-1) \end{pmatrix} \end{aligned} \tag{9}$$

and

$$f(\mu,\phi) = (\tau_0+\mu)\begin{pmatrix} c_1 \\ c_2 \end{pmatrix}, \tag{10}$$

where,

$$\begin{aligned} a_{11} &= \tfrac{\alpha x^* y^*}{(ay^*+x^*)^2}, \\ a_{12} &= -\tfrac{\alpha {x^*}^2}{(ay^*+x^*)^2}, \\ a_{21} &= \tfrac{\alpha a b_0 {y^*}^2}{(ay^*+x^*)^2}, \\ a_{22} &= \tfrac{qEly^*}{(bE+ly^*)^2} - \tfrac{\alpha a b_0 x^* y^*}{(ay^*+x^*)^2}, \\ b_{11} &= -\tfrac{rx^*}{k}, \\ c_1 &= -\tfrac{r\phi_1(0)\phi_1(-1)}{k} - \tfrac{\alpha\phi_1(0)\phi_2(0)}{a\phi_2(0)+\phi_1(0)} \quad \text{and} \\ c_2 &= \tfrac{\alpha b_0\phi_1(0)\phi_2(0)}{a\phi_2(0)+\phi_1(0)} - \tfrac{ql\phi_2(0)^2}{b^2E}. \end{aligned}$$

By Riesz representation theorem, there exits a function $\eta(\theta,\mu)$ of bounded variation for $\theta \in [-1,0]$, such that

$$L_\mu\phi = \textstyle\int_{-1}^{0} d\eta(\theta,\mu)\phi(\theta) \qquad \text{for } \phi \in C. \tag{11}$$

In fact, we can choose

$$\begin{aligned} \eta(\theta,\mu) = (\tau_0+\mu)\begin{pmatrix} a_{11} & a_{12} \\ a_{21} & a_{22} \end{pmatrix}\delta(\theta) \\ - (\tau_0+\mu)\begin{pmatrix} b_{11} & 0 \\ 0 & 0 \end{pmatrix}\delta(\theta+1), \end{aligned} \tag{12}$$

where $\delta$ is the Dirac delta function. For $\phi \in C^1([-1,0], R^2)$, define

$$A(\mu)\phi = \begin{cases} \dfrac{d\phi(\theta)}{d\theta}, & \theta \in [-1,0), \\ \int_{-1}^{0} d\eta(\mu,s)\phi(s), & \theta = 0 \end{cases}$$

and

$$R(\mu)\phi = \begin{cases} 0, & \theta \in [-1,0) \\ f(\mu,\phi), & \theta = 0. \end{cases}$$

Then system (8) is equivalent to

$$\dot{x}(t) = A(\mu)x_t + R(\mu)x_t, \tag{13}$$

where $x_t(\theta) = x(t+\theta)$ for $\theta \in [-1,0]$. For $\psi \in C^1([0,-1],(R^2)^*)$, define

$$A^*\psi(s) = \begin{cases} -\dfrac{d\psi(s)}{ds}, & s \in (0,1] \\ \int_{-1}^{0} d\eta^T(t,0)\psi(-t), & s = 0 \end{cases}$$

and a bilinear inner product

$$\langle\psi(s),\phi(\theta)\rangle = \bar{\psi}(0)\phi(0) - \int_{-1}^{0}\int_{\xi=0}^{\theta} \bar{\psi}(\xi-\theta)d\eta(\theta)\phi(\xi)d\xi, \tag{14}$$

where $\eta(\theta) = \eta(\theta,0)$. Then $A(0)$ and $A^*$ are adjoint operators. By the discussion in section II, we know that $\pm i\omega_0\tau_0$ are eigenvalues of $A(0)$. Thus, they are also eigenvalues of $A^*$. We first need to compute the eigenvalues of $A(0)$ and $A^*$ corresponding to $i\omega_0\tau_0$ and $-i\omega_0\tau_0$, respectively. Suppose that $q(\theta) = (1,\beta)^T e^{i\omega_0\tau_0\theta}$ is the eigenvector of $A(0)$ corresponding to $i\omega_0\tau_0$, then $A(0)q(\theta) = i\omega_0\tau_0 q(\theta)$. It follows from the definition of $A(0)$ and (9), (11) and (12) that

$$\tau_0\begin{pmatrix} i\omega_0 - a_{11} - b_{11}e^{-i\omega_0\tau_0} & -a_{12} \\ -a_{21} & i\omega_0 - a_{22} \end{pmatrix} q(0) = \begin{pmatrix} 0 \\ 0 \end{pmatrix}.$$

Thus, we can easily obtain

$$q(0) = (1,\beta)^T,$$

where

$$\beta = \frac{\frac{\alpha a b_0 {y^*}^2}{(ay^*+x^*)^2}}{i\omega_0 - \frac{qEly^*}{(bE+ly^*)^2} + \frac{\alpha a b_0 x^* y^*}{(ay^*+x^*)^2}}.$$

Similarly, let $q^*(s) = D(1,\beta^*)^T e^{i\omega_0\tau_0 s}$ is the eigenvector of $A^*$ corresponding to $-i\omega_0\tau_0$. By the definition of $A^*$ and (9), (10) and (11), we can compute

$$\begin{aligned} q^*(s) &= D(1,\beta^*)e^{i\omega_0\tau_0 s} \\ &= D\left(1, -\frac{\frac{\alpha {x^*}^2}{(ay^*+x^*)^2}}{i\omega_0 + \frac{qEly^*}{(bE+ly^*)^2} - \frac{\alpha a b_0 x^* y^*}{(ay^*+x^*)^2}}\right)e^{i\omega_0\tau_0 s}. \end{aligned}$$

In order to assure $\langle q^*(s), q(\theta)\rangle = 1$, we need to determine the value of $D$. From (14), we have

$$\begin{aligned} \langle q^*(s), q(\theta)\rangle &= \overline{D}(1,\bar{\beta}^*)(1,\beta)^T \\ &- \int_{-1}^{0}\int_{\xi=0}^{\theta} \overline{D}(1,\bar{\beta}^*)e^{-i\omega_0\tau_0(\xi-\theta)}d\eta(\theta) \\ &\times (1,\beta)^T e^{i\omega_0\tau_0\xi}d\xi \\ &= \overline{D}\{1 + \beta\bar{\beta}^* \\ &- \int_{-1}^{0}(1,\bar{\beta}^*)\theta e^{i\omega_0\tau_0\theta}d\eta(\theta)(1,\beta)^T\} \\ &= \overline{D}\left[1 + \beta\bar{\beta}^* - \frac{\tau_0 r x^* e^{-i\omega_0\tau_0}}{k}\right]. \end{aligned}$$

Thus, we can choose $D$ as

$$\overline{D} = \frac{1}{1 + \beta\bar{\beta}^* - \frac{\tau_0 r x^* e^{-i\omega_0\tau_0}}{k}}.$$

In the remainder of this section, we use the same notations as in [27]. We first compute the coordinates to describe the center manifold $C_0$ at $\mu = 0$. Define

$$z(t) = \langle q^*, x_t\rangle, \quad W(t,\theta) = x_t(\theta) - 2\mathrm{Re}\{z(t)q(\theta)\}. \tag{15}$$

On the center manifold $C_0$, we have

$$W(t,\theta) = W(z(t),\bar{z}(t),\theta),$$

where

$$\begin{aligned} W(z,\bar{z},\theta) = W_{20}(\theta)\tfrac{z^2}{2} + W_{11}(\theta)z\bar{z} \\ + W_{02}(\theta)\tfrac{\bar{z}^2}{2} + W_{30}(\theta)\tfrac{z^3}{6} + \ldots\ldots \end{aligned} \tag{16}$$

z and $\bar{z}$ are local coordinates for the center manifold $C_0$, in the direction of $q^*$ and $\bar{q}^*$. Note that $W$ is real if $x_t$ is real. We only consider real solutions. For solution $x_t \in C_0$ of (13), since $\mu = 0$, we have

$$\begin{aligned} \dot{z}(t) &= i\omega_0\tau_0 z + \bar{q}^*(0)f(0, W(z,\bar{z},0) + 2\mathrm{Re}\{zq(\theta)\}) \\ &\stackrel{\text{def}}{=} i\omega_0\tau_0 z + \bar{q}^*(0)f_0(z,\bar{z}). \end{aligned}$$

We rewrite this equation as

$$\dot{z}(t) = i\omega_0\tau_0 z(t) + g(z,\bar{z}),$$

where

$$\begin{aligned} g(z,\bar{z}) &= \bar{q}^*(0)f_0(z,\bar{z}) \\ &= g_{20}\tfrac{z^2}{2} + g_{11}z\bar{z} + g_{02}\tfrac{\bar{z}^2}{2} + g_{21}\tfrac{z^2\bar{z}}{2} + ..... \end{aligned} \tag{17}$$

It follows from (15) and (16) that

$$\begin{aligned} x_t(\theta) &= W(t,\theta) + 2\mathrm{Re}\{z(t)q(t)\} \\ &= W_{20}(\theta)\frac{z^2}{2} + W_{11}(\theta)z\bar{z} \\ &+ W_{02}(\theta)\frac{\bar{z}^2}{2} + (1,\beta)^T e^{i\omega_0\tau_0\theta}z \\ &+ (1,\bar{\beta})^T e^{-i\omega_0\tau_0\theta}\bar{z} + ..... \end{aligned} \tag{18}$$

It follows together with (10) that

$$\begin{aligned} g(z,\bar{z}) &= \bar{q}^*(0)f(0,x_t) = \tau_0\overline{D}(1,\bar{\beta}^*) \\ &\times \begin{pmatrix} -\frac{rx_{1t}(0)x_{1t}(-1)}{k} - \frac{\alpha x_{1t}(0)x_{2t}(0)}{ax_{2t}(0)+x_{1t}(0)} \\ \frac{\alpha b_0 x_{1t}(0)x_{2t}(0)}{ax_{2t}(0)+x_{1t}(0)} - \frac{qlx_{2t}{}^2(0)}{b^2E} \end{pmatrix} \\ &= -\frac{\tau_0\overline{D}r}{k}\Big\{z + \bar{z} + W_{20}^{(1)}(0)\frac{z^2}{2} + W_{11}^{(1)}(0)z\bar{z} \\ &+ W_{02}^{(1)}(0)\frac{\bar{z}^2}{2} + .....\Big\}\Big\{ze^{-i\omega_0\tau_0} + \bar{z}e^{i\omega_0\tau_0} \\ &+ W_{20}^{(1)}(-1)\frac{z^2}{2} + W_{11}^{(1)}(-1)z\bar{z} \\ &+ W_{02}^{(1)}(-1)\frac{\bar{z}^2}{2} + .....\Big\} + \frac{(\beta^*b_0-1)\tau_0\overline{D}\alpha}{a}\Big\{z \\ &+ \bar{z} + W_{20}^{(1)}(0)\frac{z^2}{2} + W_{11}^{(1)}(0)z\bar{z} + W_{02}^{(1)}(0)\frac{\bar{z}^2}{2} \\ &+ .....\Big\} - \tau_0\overline{D}\beta^*d_0\Big\{\beta z + \bar{\beta}\bar{z} + W_{20}^{(2)}(0)\frac{z^2}{2} \\ &+ W_{11}^{(2)}(0)z\bar{z} + W_{02}^{(2)}(0)\frac{\bar{z}^2}{2} + .....\Big\} \\ &- \frac{\tau_0\overline{D}\beta^*ql}{b^2E}\Big\{\beta z + \bar{\beta}\bar{z} + W_{20}^{(2)}(0)\frac{z^2}{2} \\ &+ W_{11}^{(2)}(0)z\bar{z} + W_{02}^{(2)}(0)\frac{\bar{z}^2}{2} + .....\Big\}^2. \end{aligned} \tag{19}$$

Comparing the coefficients with (17), we have

$$\begin{aligned} g_{20} &= 2\tau_0\overline{D}\Big[-\frac{re^{-i\omega_0\tau_0}}{k} - \frac{\alpha}{2a}W_{20}^{(1)}(0) \\ &+ \beta^*\Big\{\frac{\alpha b_0}{2a}W_{20}^{(1)}(0) - \frac{d_0}{2}W_{20}^{(2)}(0) - \frac{\beta^*ql\beta^2}{b^2E}\Big\}\Big], \\ g_{11} &= 2\tau_0\overline{D}\Big[-\frac{r(e^{-i\omega_0\tau_0}+e^{i\omega_0\tau_0})}{k} - \frac{\alpha}{2a}W_{11}^{(1)}(0) \\ &+ \beta^*\Big\{\frac{\alpha b_0}{2a}W_{11}^{(1)}(0) - \frac{d_0}{2}W_{11}^{(2)}(0) - \frac{ql\beta\bar{\beta}}{b^2E}\Big\}\Big], \\ g_{02} &= 2\tau_0\overline{D}\Big[-\frac{re^{i\omega_0\tau_0}}{k} - \frac{\alpha}{2a}W_{02}^{(1)}(0) \\ &+ \beta^*\Big\{\frac{\alpha b_0}{2a}W_{02}^{(1)}(0) - \frac{d_0}{2}W_{02}^{(2)}(0) - \frac{\beta^*ql\bar{\beta}^2}{b^2E}\Big\}\Big], \\ g_{21} &= -\frac{\tau_0\overline{D}r}{k}\Big\{W_{11}^{(1)}(-1) \\ &+ W_{20}^{(1)}(-1) + \frac{W_{20}^{(1)}(0)e^{i\omega_0\tau_0}}{2} \\ &+ W_{11}^{(1)}(0)e^{-i\omega_0\tau_0}\Big\} - \frac{2\tau_0\overline{D}\beta^*ql}{b^2E} \\ &\times \Big\{W_{11}^{(2)}(0)\beta + \frac{W_{20}^{(2)}(0)\bar{\beta}}{2}\Big\}. \end{aligned} \tag{20}$$

Since there are $W_{20}(\theta)$ and $W_{11}(\theta)$ in $g_{21}$ , we still need to compute them.

From (13) and (15), we have

$$\begin{aligned} \dot{W} &= \dot{x}_t - \dot{z} - \dot{\bar{z}}\bar{q} \\ &= \begin{cases} AW - 2\mathrm{Re}\{\bar{q}^*(0)f_{0q}(\theta)\}, & \theta\in[-1,0), \\ AW - 2\mathrm{Re}\{\bar{q}^*(0)f_{0q}(\theta)\} + f_0, & \theta = 0, \end{cases} \\ &\stackrel{\text{def}}{=} AW + H(z,\bar{z},\theta). \end{aligned} \tag{21}$$

Here

$$\begin{aligned} H(z,\bar{z},\theta) &= H_{20}(\theta)\tfrac{z^2}{2} + H_{11}(\theta)z\bar{z} \\ &+ H_{02}(\theta)\tfrac{\bar{z}^2}{2} + ..... \end{aligned} \tag{22}$$

Substituting the corresponding series into (21) and comparing the coefficients, we obtain

$$\begin{aligned} &(A - 2i\omega_0\tau_0)W_{20}(\theta) = -H_{20}(\theta), \\ &AW_{11}(\theta) = -H_{11}(\theta)..... \end{aligned} \tag{23}$$

From (21), we know that for $\theta\in[-1,0)$,

$$\begin{aligned} H(z,\bar{z},\theta) &= -\bar{q}^*(0)f_0q(\theta) - q^*(0)\bar{f}_0(\theta) \\ &= -g(z,\bar{z})q(\theta) - \bar{g}(z,\bar{z})\bar{q}(\theta). \end{aligned} \tag{24}$$

Comparing the coefficients with (22), we have

$$H_{20}(\theta) = -g_{20}q(\theta) - \bar{g}_{02}\bar{q}(\theta) \tag{25}$$

and

$$H_{11}(\theta) = -g_{11}q(\theta) - \bar{g}_{11}\bar{q}(\theta). \tag{26}$$

From (23), (25) and the definition of $A$, it follows that

$$\dot{W}_{20}(\theta) = 2i\omega_0\tau_0W_{20}(\theta) + g_{20}q(\theta) + \bar{g}_{02}\bar{q}(\theta).$$

Notice that $q(\theta) = (1,\beta)^Te^{i\omega_0\tau_0\theta}$, hence

$$\begin{aligned} W_{20}(\theta) &= \tfrac{ig_{20}}{\omega_0\tau_0}q(0)e^{i\omega_0\tau_0\theta} + \tfrac{i\bar{g}_{02}}{3\omega_0\tau_0}\bar{q}(0)e^{-i\omega_0\tau_0\theta} \\ &+ E_1e^{2i\omega_0\tau_0\theta}, \end{aligned} \tag{27}$$

where $E_1 = (E_1^{(1)}, E_1^{(2)}) \in R^2$ is a constant vector. Similarly, from (23) and (26), we obtain

$$W_{11}(\theta) = -\frac{ig_{11}}{\omega_0\tau_0}q(0)e^{i\omega_0\tau_0\theta} + \frac{i\bar{g}_{11}}{\omega_0\tau_0}\bar{q}(0)e^{-i\omega_0\tau_0\theta} + E_2, \tag{28}$$

where $E_2 = (E_2^{(1)}, E_2^{(2)}) \in R^2$ is a constant vector. In what follows, we shall seek appropriate $E_1$ and $E_2$. From the definition of $A$, we obtain

$$\int_{-1}^{0} d\eta(\theta)W_{20}(\theta) = 2i\omega_0\tau_0W_{20}(0) - H_{20}(0) \tag{29}$$

and

$$\int_{-1}^{0} d\eta(\theta)W_{11}(\theta) = -H_{11}(0), \tag{30}$$

where $\eta(\theta) = \eta(0,\theta)$. By (21), we have

$$\begin{aligned} H_{20}(0) &= -g_{20}q(0) - \bar{g}_{02}\bar{q}(0) \\ &+ 2\tau_0\begin{pmatrix} -\frac{re^{-i\omega_0\tau_0}}{k} - \frac{\alpha}{2a}W_{20}^{(1)}(0) \\ 0 \end{pmatrix} \end{aligned} \tag{31}$$

and

$$H_{11}(0) = -g_{11}q(0) - \bar{g}_{11}\bar{q}(0) + 2\tau_0 \begin{pmatrix} -\frac{r(e^{-i\omega_0\tau_0}+e^{i\omega_0\tau_0})}{k} - \frac{\alpha}{2a}W_{11}^{(1)}(0) \\ 0 \end{pmatrix}. \tag{32}$$

Substituting (27) and (31) into (29) and noticing that

$$\left(i\omega_0\tau_0 I - \int_{-1}^{0} e^{i\omega_0\tau_0\theta} d\eta(\theta)\right) q(0) = 0$$

and

$$\left(-i\omega_0\tau_0 I - \int_{-1}^{0} e^{-i\omega_0\tau_0\theta} d\eta(\theta)\right) \bar{q}(0) = 0,$$

we obtain

$$\left(2i\omega_0\tau_0 I - \int_{-1}^{0} e^{2i\omega_0\tau_0\theta} d\eta(\theta)\right) E_1 = 2\tau_0 \begin{pmatrix} -\frac{re^{-i\omega_0\tau_0}}{k} - \frac{\alpha}{2a}W_{20}^{(1)}(0) \\ 0 \end{pmatrix}.$$

This leads to

$$\begin{pmatrix} 2i\omega_0 - a_{11} - b_{11}e^{-2i\omega_0\tau_0} & -a_{12} \\ -a_{21} & 2i\omega_0 - a_{22} \end{pmatrix} E_1 = 2\begin{pmatrix} -\frac{re^{-i\omega_0\tau_0}}{k} - \frac{\alpha}{2a}W_{20}^{(1)}(0) \\ 0 \end{pmatrix}.$$

It follows that

$$E_1^{(1)} = \frac{2}{A}\begin{vmatrix} -\frac{re^{-i\omega_0\tau_0}}{k} - \frac{\alpha}{2a}W_{20}^{(1)}(0) & -a_{12} \\ 0 & 2i\omega_0 - a_{22} \end{vmatrix}$$

and

$$E_1^{(2)} = \frac{2}{A}\begin{vmatrix} 2i\omega_0 - a_{11} - b_{11}e^{-2i\omega_0\tau_0} & -\frac{re^{-i\omega_0\tau_0}}{k} - \frac{\alpha}{2a}W_{20}^{(1)}(0) \\ -a_{21} & 0 \end{vmatrix},$$

where

$$A = \begin{vmatrix} 2i\omega_0 - a_{11} - b_{11}e^{-2i\omega_0\tau_0} & -a_{12} \\ -a_{21} & 2i\omega_0 - a_{22} \end{vmatrix}.$$

Similarly, substituting (28) and (32) into (30), we get

$$\begin{pmatrix} -a_{11} - b_{11} & -a_{12} \\ -a_{21} & -a_{22} \end{pmatrix} E_2 = 2\begin{pmatrix} -\frac{r(e^{-i\omega_0\tau_0}+e^{i\omega_0\tau_0})}{k} - \frac{\alpha}{2a}W_{11}^{(1)}(0) \\ 0 \end{pmatrix}.$$

It follows that

$$E_2^{(1)} = \frac{2}{B}\begin{vmatrix} -\frac{r(e^{-i\omega_0\tau_0}+e^{i\omega_0\tau_0})}{k} - \frac{\alpha}{2a}W_{11}^{(1)}(0) & -a_{12} \\ 0 & -a_{22} \end{vmatrix}$$

and

$$E_2^{(2)} = \frac{2}{B}\begin{vmatrix} -a_{11} - b_{11} & -\frac{r(e^{-i\omega_0\tau_0}+e^{i\omega_0\tau_0})}{k} - \frac{\alpha}{2a}W_{11}^{(1)}(0) \\ -a_{21} & 0 \end{vmatrix},$$

where

$$B = \begin{vmatrix} -a_{11} - b_{11} & -a_{12} \\ -a_{21} & -a_{22} \end{vmatrix}.$$

Thus, we can determine $W_{20}(\theta)$ and $W_{11}(\theta)$ from (27) and (28). Furthermore, $g_{21}$ in (20) can be expressed by the parameters and delay. Thus, we can compute the following values:

$$c_1(0) = \frac{i}{2\omega_0\tau_0}(g_{20}g_{11} - 2|g_{11}|^2 - \frac{|g_{02}|^2}{3}) + \frac{g_{21}}{2},$$
$$\mu_2 = -\frac{\mathrm{Re}\{c_1(0)\}}{\mathrm{Re}\{\lambda'(\tau_0)\}},$$
$$\beta_2 = 2\mathrm{Re}(c_1(0)),$$
$$T_2 = -\frac{\mathrm{Im}\{c_1(0)\} + \mu_2\mathrm{Im}\{\lambda'(\tau_0)\}}{\omega_0\tau_0},$$

which determine the qualities of bifurcating periodic solutions in the center manifold at the critical value $\tau_0$ and we state the following theorem.

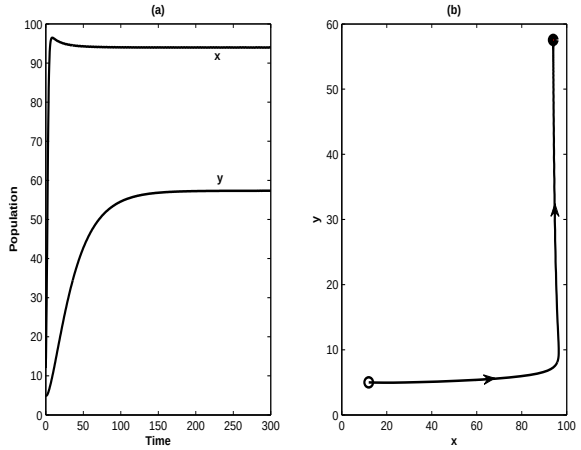


Fig. 2. These figures show that the coexistence equilibrium point $E^*(93.9826, 57.5527)$ is locally asymptotically stable when $\tau = 0$. Fig. (a) is the time evolutions of the model system (2) and Fig. (b) is the corresponding phase plane. Parameters are as in the TABLE 1.

**Theorem** 3. $\mu_2$ determines the direction of the Hopf bifurcation: if $\mu_2 > 0$ ($\mu_2 < 0$) then the Hopf bifurcation is supercritical (subcritical) and the bifurcating periodic solutions exit for $\tau > \tau_0$ ($\tau < \tau_0$). $\beta_2$ determines the stability of the bifurcating periodic solutions: the bifurcating periodic solutions are stable (unstable) if $\beta_2 < 0$ ($\beta_2 > 0$). $T_2$ determines the period of the bifurcating periodic solutions: the period increases (decreases) if $T_2 > 0$ ($< 0$).

## IV. Numerical Results

In this section, we give some numerical simulations to illustrate the analytical results observed in the previous sections. For illustration purpose, we consider the parameter values as in the TABLE 1. Initial value is considered as $(12, 5)$ for each simulation and it is indicated by empty circle and the coexistence equilibrium $E^*$ is shown by bullet. When $\tau = 0$, the parameter set satisfies all conditions of the Theorem 1 and therefore trajectories eventually reach to the coexistence equilibrium point $E^*(93.9826, 57.5527)$, indicating stability of the system (2) around the coexistence equilibrium (Fig. 2).

When $\tau \neq 0$, one can compute from Theorem 2(ii), $\omega_0 = 0.9401$ and $\tau_0 = 1.6613$. Therefore, the coexistence equilibrium $E^*(x^*, y^*)$ is locally asymptotically stable for $\tau < \tau_0 = 1.6613$ and unstable for $\tau > \tau_0 = 1.6613$. Time evolutions of the system (2) for $\tau = 1.5$ is shown

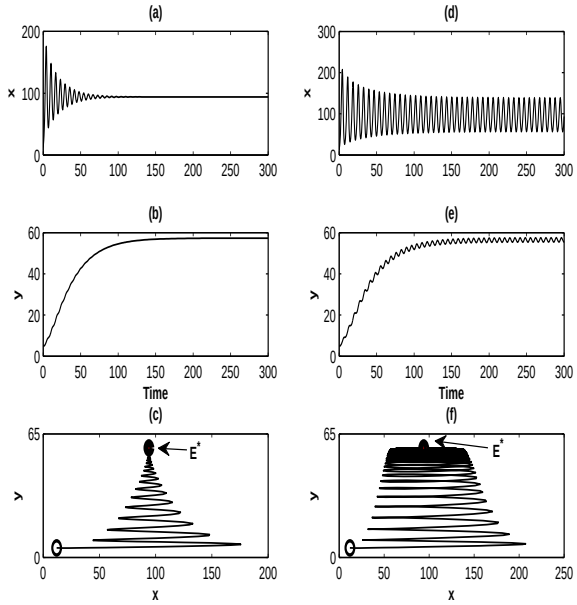


Fig. 3. Conditional stability of the system (2). Figs. in the first panel (a-c) and in the second panel (d-f) depict the time evolutions and phase portraits of the system (2) for $\tau = 1.5(< \tau_0 = 1.6613)$ and $\tau = 1.7(> \tau_0 = 1.6613)$, respectively. Figs. $(a) - (c)$ show that the system is stable when the delay is less than its critical value and Figs. $(d) - (f)$ depict that the system is unstable when the delay exceeds its critical value. Parameters are as in the TABLE 1.

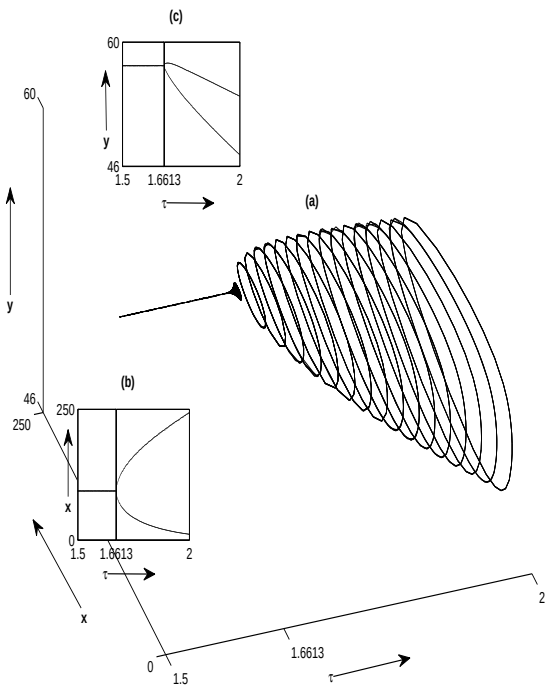


Fig. 4. Bifurcation diagrams of the system (2) with respect to $\tau$. Fig. (a) is drawn in the three-dimensional space $(x, y, \tau)$. Fig. (b) is its projection on the two-dimensional plane $(x, \tau)$ and Fig. (c) is the same on the $(y, \tau)$ plane. These figures show that the coexistence equilibrium is stable for $\tau < 1.6613$, unstable for $\tau > 1.6613$ and a Hopf bifurcation exists at $\tau = \tau_0 = 1.6613$. Other parameters are as in the TABLE 1.

in the Figs. 3(a) and 3(b) for prey and predator populations,

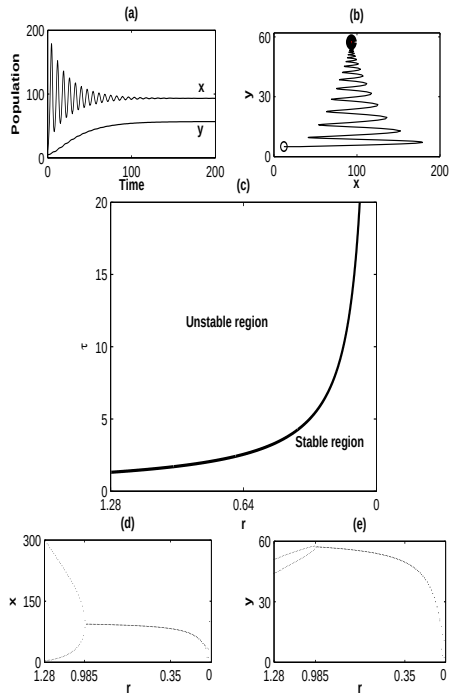


Fig. 5. Behavior of the system (2) with respect to $r$. Figs. 5(a) and 5(b) are, respectively, the time series and phase diagram of the system with $\tau = 1.7$ and $r = 0.9$. These figures indicate that the system returns to its stable coexistence equilibrium when the value of $r$ is lowered. Fig. 5(c) is the stability region of the system in $(r, \tau)$ parameter plane. Bifurcation diagrams of prey and predator populations with respect to the intrinsic growth rate $r$ are depicted in the Figs. 5(d) and 5(e), respectively. All other parameters are as in the Fig. 3(f).

respectively. The corresponding phase diagram is depicted in the Fig. 3(c). These figures confirm that the system is locally asymptotically stable when the length of delay remains below its critical value $\tau_0$. Similar figures for the delay ($\tau = 1.7$) higher than its critical value are plotted in the Figs. 3(d)-3(f). These figures show that populations fluctuate around the coexistence equilibrium when length of delay exceeds its critical value, depicting the instability of the system.

System behavior can be demonstrated more prominently if we plot the bifurcation diagram in the three-dimensional space $(\tau, x, y)$. Fig. 4(a) shows that the coexistence equilibrium is stable for $\tau < 1.6613$ (shown by black solid line) but the instability sets in when $\tau > 1.6613$ (shown by colored cycles). Observe that the amplitude of oscillations increases with the length of delay. The behavior of each population with varying $\tau$ can be observed if we take the projection of the three-dimensional figure on the two-dimensional plane. Figs. 4(b) and 4(c) depict the bifurcation diagrams of the prey and predator populations in the $(\tau, x)$ and $(\tau, y)$ planes, respectively.

Using Theorem 3, one can determine the values of $\mu_2$, $\beta_2$ and $T_2$ as $\mu_2 = 0.00065853, \beta_2 = 0.0034$ and $T_2 = 0.0063$. Since $\mu_2 > 0$ and $\beta_2 > 0$, the Hopf bifurcation is supercritical and unstable. Also, period of the bifurcating periodic solution increases with $\tau$ as $T_2 > 0$.

To verify the sensitivity of the system to other parameters,

we perform extensive numerical simulations with respect to each parameter. It is observed that the system is sensitive only to the parameter $r$, the intrinsic growth rate of prey population. Oscillations can be reduced completely and the system returns to stable state if the value of $r$ is reduced. Figs. 5(a) and 5(b) show that trajectories converge to the coexistence equilibrium $E^*$ when $r$ is lowered to $0.9$ from $1$, keeping $\tau$ above its critical value. To observe the interrelationship between $r$ and $\tau$, we have determined the stability region in $(r, \tau)$ parameter plane (Fig. 5(c)). The line separating the stable and unstable regions is the Hopf bifurcation line. This figure indicates that the system can tolerate longer delay for lower value of $r$. Bifurcation diagrams of prey population (Fig. 5(d)) and predator population (Fig. 5(e)) indicate that both populations go to extinction when $r = 0$. Population densities then stay in stable state for long higher values of $r$ before it becomes unstable at $\tau = 0.985$.

## V. Discussion

In this paper, we have studied the effects of delay on an predator-prey interaction with predator harvesting. The delay is proposed in the density-dependent prey growth term on the assumption that a fixed time $\tau$ is elapsed by the prey population before it affects on the per capita growth rate. This study, in fact, is an extension of the work of Bairagi et al. [10] where they studied the system in absence of delay. We have obtained sufficient conditions on the system parameters for which the delay-induced system is asymptotically stable around the coexistence equilibrium for all values of the delay parameter and if the conditions are not satisfied, then there exists a critical value $\tau_0$ of the delay parameter below which the system is stable and above which the system is unstable. By applying the normal form theory and the center manifold theorem, the explicit formulae which determine the stability and direction of the bifurcating periodic solutions have been determined. Our analytical and simulation results show that when $\tau$ passes through the critical value $\tau_0$, the coexistence equilibrium $E^*$ losses its stability and a Hopf bifurcation occurs, i.e., a family of periodic solutions bifurcate from $E^*$. Also, the amplitude of oscillations increases with increasing $\tau$. Thus, the quantitative level of abundance of system populations depends crucially on the delay parameter if the feedback delay exceeds the critical value $\tau_0$. For the considered parameter values, it is observed that the Hopf bifurcation is supercritical and the bifurcating periodic solutions are unstable. From management point of view, it is important to maintain the system population at stable state for ecosystem-based sustainable harvesting. Our simulation studies show that the unstable oscillatory system caused due to higher feedback delay can be made stable only when the biological growth rate of prey $(r)$ is lowered. The system is not sensitive to other parameters including the harvesting effort, $E$. Thus, our study says against the traditional concept [14]–[16] that time delay makes a stable equilibrium unstable and harvesting helps to regain the stability.

## References


[1] M. L. Rosenzweig, R. H. MacArthur, "Graphical representation and stability conditions of predator-prey interactions", *American Naturalist*, vol. 47, pp. 209-223, 1963.

[2] R. Arditi and L. R. Ginzburg, "Coupling in predator-prey dynamics: ratio-dependence," *Jr. Theor. Biol. L.R.*, vol. 139, pp. 311-326, 1989.

[3] D. Alstad, "Basic Populas Models of Ecology", *Prentice Hall, Inc.*, NJ, 2001.

[4] R. A. Myer, and B. Worm, "Achieving sustainable use of renewable resources", *Nature*, vol. 423, pp. 280-283, 2003.

[5] FAO Fisheris Development, "The state of the world fisheries and aquaculture", *FAO*, Rome, 2004.

[6] C. W. Clark, "Mathematical Bioeconomics: The Mathematics of Conservation," *John Wiley & Sons*, New Jersey, 2010.

[7] N. Bairagi, S. Chaudhury and J. Chattopadhyay, "Harvesting as a disease control measure in an eco-epidemiological system -a theoretical study", *Mathematical Biosciences*, vol. 217, pp. 134-144, 2009.

[8] S. Chakraborty, S. Pal and N. Bairagi, "Predator-prey interaction with harvesting: mathematical study with biological ramifications," *Appl. Math. Analysis* vol. 36, pp. 4044-4059, 2012.

[9] S. Chakraborty, S. Pal, and N. Bairagi, "Management and analysis of predator-prey fishery model", *Nonlinear Studies*, vol 19 no. 2, pp. 241-263, 2012.

[10] N. Bairagi, S. Chakraborty and S. Pal, "Heteroclinic Bifurcation and Multistability in a Ratio-dependent Predator-Prey System with Michaelis-Menten Type Harvesting Rate", *Lecture Notes in Engineering and Computer Science: Proceedings of The World Congress on Engineering 2012, WCE 2012, 4-6 July, 2012, London, U.K.*, vol.1, pp. 578-583, 2012.

[11] D. Xiao, S. Ruan, "Global dynamics of a ratio-dependent predator-prey system," *J. Math. Biol.*, vol. 43, pp. 268-290, 2001.

[12] M. MacDonald, "Biological Delay Systems: Linear Stability Theory", *Cambridge University Press*, Cambridge, 1989.

[13] S. Ruan, "On nonlinear dynamics of predator-prey models with discrete delay", *Math. Model. Natural Phenom*, vol. 4 pp. 140-188, 2009.

[14] F. Brauer, "Stability of some population models with delay," *Math. Biosci.*, vol. 33, pp. 345-358, 1977.

[15] A. Martin and S. Ruan, "Predator-prey models with delay and pray harvesting," *J. Math. Biol.*, vol. 43, pp. 247-267, 2001.

[16] D. Xiao and S. Ruan, "Bogdanov-Takens bifurcations in predator-prey systems with constant rate harvesting," *Fields Inst. Commun.*, vol. 21, pp. 493-506, 1999.

[17] J. Xia, Z. Liu, R. Yuan and S. Ruan, "The effects of harvesting and the delay on predator-prey systems with holling type II functional response," *SIAM J. APPL. Math.*, vol. 70, no. 4, pp. 1178-1200, 2009.

[18] T. K. Kar, "Selective harvesting in a prey-predator fishery with time delay," *Mathematical and Computer Modelling*, vol. 38, pp. 449-458, 2003.

[19] H. I. Freedman, "Deterministic Mathematical Models in Population Ecology", *HIFR Consulting Ltd.*, Edmonton, 1987.

[20] R. M. May, "Time delay versus stability in population models with two and three trophic levels", *Ecology*, vol. 4, pp. 315-325, 1973.

[21] F. Brauer, Absolute stability in delay equations, *Journal of Differential Equations*, vol. 69, no. 2, pp. 185-191, 1987.

[22] Y. Kuang, "Delay Differential Equations with Applications in Population Dynamics of Mathematics in Science and Engineering, Academic Press, Boston, Mass, USA, 1993.

[23] R. V. Culshaw and S. Ruan, "A Delay-differential equation model of HIV infection of $CD4^+$ T-cells," *Mathematical Biosciences*, vol. 165, pp. 27-39, 2000.

[24] J. Dieudonne', "Foundations of Modern Analysis," *Academic Press*, 1960, New York.

[25] S. Ruan and J. Wei, "On the zeros of transcendental functions with applications to stability of delay differential equations," *Dynam. Contin. Discr. Impuls. Syst*, vol. 10, pp. 863-874, 2003.

[26] B. D. Hassard, N. D. Kazarinoff and Y. H. Wan, "Theory and Application of Hopf Bifurcation," *Cambridge University, Cambridge*, 1981.

[27] K. Gopalsamy and X. He, "Delay-independent stability in bidirectional associative memory networks," *IEEE Trans, Neural Netw*, vol. 5, pp. 998-1002, 1994.


**M** r. Debaldev Jana was born at Tamluk on 13 January, 1984. He received his B.Sc and M.Sc degree in Mathematics from Jadavpur University, Kolkata in 2006 and 2008 respectively. He has submitted his Ph.D. Thesis in 2012 under the guidance of Dr. Nandadulal Bairagi. His research interests includes mathematical ecology, pattern formation, fractional differential equation etc.

**(Revised online publication: 30 August 2012)**

Mr. Swapan Chakraborty is working as a teacher in Mathematics at Baruipara High School, Halisahar, 24 Parganas (N), West Bengal, India. He has submitted his Ph.D. work in Jadavpur University under the joint supervision of Dr. Samares Pal and Dr. Nandadulal Bairagi. He has published five research articles in international journals of reputes. His fields of interest are mathematical ecology, ecoepidemiology and bioeconomic harvesting.

Nandadulal Bairagi (1967) did his M.Sc. and Ph.D. from Jadavpur University, Kolkata, India. He joined as a faculty of Mathematics Department of Jadavpur University in 2001. He is now Associate Professor and Coordinator of the Centre for Mathematical Biology and Ecology. He is the Founder Secretary of Biomathematical Society of India. He has published many papers in different fields of biomathematics. His Research interests include ecology, epidemiology, bioeconomic harvesting, physiology and system biology.

(Revised online publication: 30 August 2012)